REVISED
FINAL SITE PLAN
VENTANA MEDICAL SYSTEMS
LOT 4 MODULAR BUILDINGS
OV1215- 03

GENERAL NOTES

1. THE GROSS AREA OF THIS DEVELOPMENT IS 29.84 ACRES.
2. THE PROPOSED SITE COVERAGE IS 10.73 ACRES/ 29.84 ACRES = 36%
3. THE GROSS FLOOR AREA OF THIS DEVELOPMENT IS 56,600 S.F.
4. THE FLOOR AREA RATIO (FAR) FOR THIS DEVELOPMENT IS 0.04.
5. THE GROSS AREA OF ALL PROPOSED IMPERVIOUS SURFACES IS 162,497 S.F. (3.73 AC).
6. NO PUBLIC STREETS ARE PROPOSED WITH THIS DEVELOPMENT.
7. ASSURANCES FOR SITE IMPROVEMENTS, LANDSCAPING AND RE-VEGETATION BONDS MUST BE POSTED PRIOR TO ISSUANCE OF GRADING PERMITS.
8. ALL PROPOSED UTILITIES WILL BE UNDERGROUND.
9. PROPOSED USES AS OFFICE AND RESEARCH.

PLANNING GENERAL NOTES

1. THE MAXIMUM ALLOWED BUILDING HEIGHT FOR THIS DEVELOPMENT IS 36'.
2. THE PROPOSED BUILDING HEIGHT IS 19'.
3. THE MAXIMUM BUILDING SITE COVERAGE IS FIFTY (50%) PERCENT.
4. THERE IS NO REQUIRED OPEN SPACE.
   THE TOTAL AMOUNT OF OPEN SPACE PROVIDED WITHIN THIS PROJECT IS 19.11 ACRES/29.84 ACRES = 64%
5. THE GROSS AREA IS 29.84 ACRES.
6. A MINIMUM OF 15% OF NET TOTAL AREA MUST BE LANDSCAPED.
   LANDSCAPED AREA IS 5.84 ACRES. (16.2%).
7. THE LANDSCAPE BUFFERYARDS FOR THIS PROJECT ARE: ALL = 30' (BUFFERYARD 'B'), NORTH OF VISTOSO VILLAGE SITE ENTRANCE TO THE SOUTH ENTRANCE OF THE SITE IS A 40' NATURAL TYPE "B" BUFFERYARD.
8. THE BUILDING SETBACKS FOR THIS PROJECT ARE: FRONT = 25' (EAST), SIDE = 20' (NORTH AND SOUTH), REAR = 30' (WEST)
9. EXISTING ZONING IS RANCHO VISTOSO PAD, OPEN SPACE, AND OFFICE RESEARCH PARK (CPI)
10. ALL SIGNAGE AND LIGHTING TO BE ADDRESSED AS PART OF A SEPARATE REVIEW AND APPROVAL PROCESS.

ENGINEERING GENERAL NOTES

1. BASIS OF ELEVATION: ELEVATIONS ARE BASED ON NGVD 1929 BEING THE TOP OF A BRASS CAP SURVEY MONUMENT, RLS12214, LOCATED AT CENTERLINE INTERSECTION OF INNOVATION PARK DRIVE AND VISTOSO COMMERCE PLACE. ELEVATION IS 2809.52 (NGVD 29).
2. THE DESIGN VEHICLE FOR THIS PROJECT IS A SU-30. THE DESIGN SPEED FOR THIS PROJECT IS 15 MPH.
3. ALL NEW PUBLIC ROADS WITHIN AND ADJACENT TO THIS PROJECT WILL BE CONSTRUCTED IN ACCORDANCE WITH APPROVED PLANS. SEPARATE PUBLIC IMPROVEMENT AND CONSTRUCTION PLANS WILL BE SUBMITTED TO THE TOWN ENGINEER'S OFFICE FOR REVIEW AND APPROVAL.
4. ANY RELOCATION OR MODIFICATION OF EXISTING UTILITIES AND/OR PUBLIC IMPROVEMENTS NECESSITATED BY THE PROPOSED DEVELOPMENT WILL BE AT NO EXPENSE TO THE PUBLIC.
5. MATERIALS WITHIN SIGHT VISIBILITY TRIANGLES MUST BE PLACED SO AS NOT TO INTERFERE WITH A VISIBILITY PLANE DESCRIBED BY TWO HORIZONTAL LINES LOCATED THIRTY (30) INCHES AND SEVENTY TWO (72) INCHES ABOVE FINISHED GRADE OF THE ROADWAY SURFACE.
6. FINAL SITE PLANS AND IMPROVEMENT PLAN MUST BE APPROVED FOR COMMERCIAL LOTS OR PADS PRIOR TO THE ISSUANCE OF ANY PERMITS BY THE TOWN ENGINEER AND/OR BUILDING OFFICIAL.
7. ALL WEATHER ACCESS MUST BE PROVIDED TO ALL LOTS WITHIN THE SUBDIVISION.

DRAINAGE GENERAL NOTES

1. DEVELOPER WILL COVENANT TO HOLD TOWN OF ORO VALLEY, ITS SUCCESSORS AND ASSIGNS, HARMLESS IN THE EVENT OF FLOODING.
2. DRAINAGE WILL NOT BE ALTERED, DISTURBED, OR OBSTRUCTED WITHOUT THE APPROVAL OF THE ORO VALLEY TOWN COUNCIL.
3. DRAINAGE STRUCTURES MUST BE CONSTRUCTED AND INSTALLED ACCORDING TO TOWN STANDARDS AND PAID FOR BY THE DEVELOPER. ALL DRAINAGE STRUCTURES MUST BE DESIGNED TO CONVEY A Q_{100} FLOW.
4. THE DEVELOPER WILL ACCEPT RESPONSIBILITY FOR MAINTENANCE, CONTROL, SAFETY AND LIABILITY OF PRIVATE DRAINAGE WAYS, DRAINAGE EASEMENTS AND COMMON AREAS.
5. ALL DRAINAGE WAYS WILL BE CONSTRUCTED ACCORDING TO APPROVED PLANS PRIOR TO THE ISSUANCE OF ANY PERMITS FROM THE TOWN ENGINEER AND/OR BUILDING OFFICIAL FOR LOT 4 OF BEING A RESUBDIVISION OF LOT 2, 4, 5, AND 6 OF RANCHO VISTOSO NEIGHBORHOOD 3, PHASE 1, LOTS 2 AND 4 THROUGH 8, AS RECORDED IN BOOK 54, M&P PAGE 36.
6. DRAINAGE MUST BE COLLECTED AND RELEASED FROM A PROPOSED DEVELOPMENT AT THE LOCATIONS AND IN THE MANNER EXISTING PRIOR TO DEVELOPMENT.
7. DRAINAGE WAYS MUST BE PROVIDED WHERE NECESSARY TO CARRY DRAINAGE FLOWS THROUGH OR FROM THE DEVELOPMENT AND SUCH DRAINAGE WAYS MUST BE DEDICATED AND MAINTAINED BY PROPERTY OWNERS OR PROPERTY OWNERS ASSOCIATION.
8. DRAINAGE WAYS MUST BE DESIGNED TO NOT DISCHARGE ONTO PAVED STREETS, EASEMENTS OR PARKING AREAS.
9. PARKING AREA MUST NOT BE USED AS DETENTION BASINS.

ORO VALLEY WATER GENERAL NOTES

1. THIS DEVELOPMENT MUST COMPLY WITH THE ORO VALLEY WATER UTILITY SPECIFICATIONS MANUAL DURING ALL PHASES OF CONSTRUCTION.
2. THIS PROJECT WILL BE SERVED BY ORO VALLEY WATER UTILITY WHICH HAS BEEN DESIGNATED AS HAVING AN ASSURED 100 YEAR WATER SUPPLY BY THE DIRECTOR OF WATER RESOURCES. ANY AND ALL WELLS MUST BE ABANDONED PER ADWR REGULATIONS.
3. A LINE EXTENSION AGREEMENT MUST BE IN PLACE PRIOR TO ANY WORK ON THE WATER INFRASTRUCTURE BEFORE THIS PROJECT BEGINS.
4. ALL METERS SHALL HAVE A BACKFLOW PROTECTION DEVICE INSTALLED ON THE CUSTOMER SIDE OF THE METER.
5. ALL FIRE SERVICES SHALL HAVE A BACKFLOW PROTECTION DEVICE INSTALLED ON THEM.
6. WATER INFRASTRUCTURE AS REPRESENTED ON THIS PLAN IS FOR INFORMATIONAL PURPOSES ONLY. A SEPARATE WATER IMPROVEMENT PLAN MUST BE SUBMITTED TO THE ORO VALLEY WATER UTILITY (OVWU) FOR TECHNICAL REVIEW AND COMPLIANCE WITH APPLICABLE STATUTES, CODES AND SPECIFICATIONS. ADDITIONAL WATER INFRASTRUCTURE MAY BE DEEMED NECESSARY UPON REVIEW OF THE WATER IMPROVEMENT PLAN.

WASTEWATER GENERAL NOTES

1. PROJECT IS IN CONFORMANCE WITH SECTION J, WASTEWATER, OF THE PIMA COUNTY DEVELOPMENT PLAN REQUIREMENTS AS REFERENCED IN 18.71.030.A.

GENERAL UTILITY NOTES

1. SHOULD AN EASEMENT BE IN CONFLICT WITH ANY PROPOSED BUILDING LOCATION, VACATION OF THE EASEMENT IS TO OCCUR PRIOR TO ISSUANCE BUILDING PERMITS.

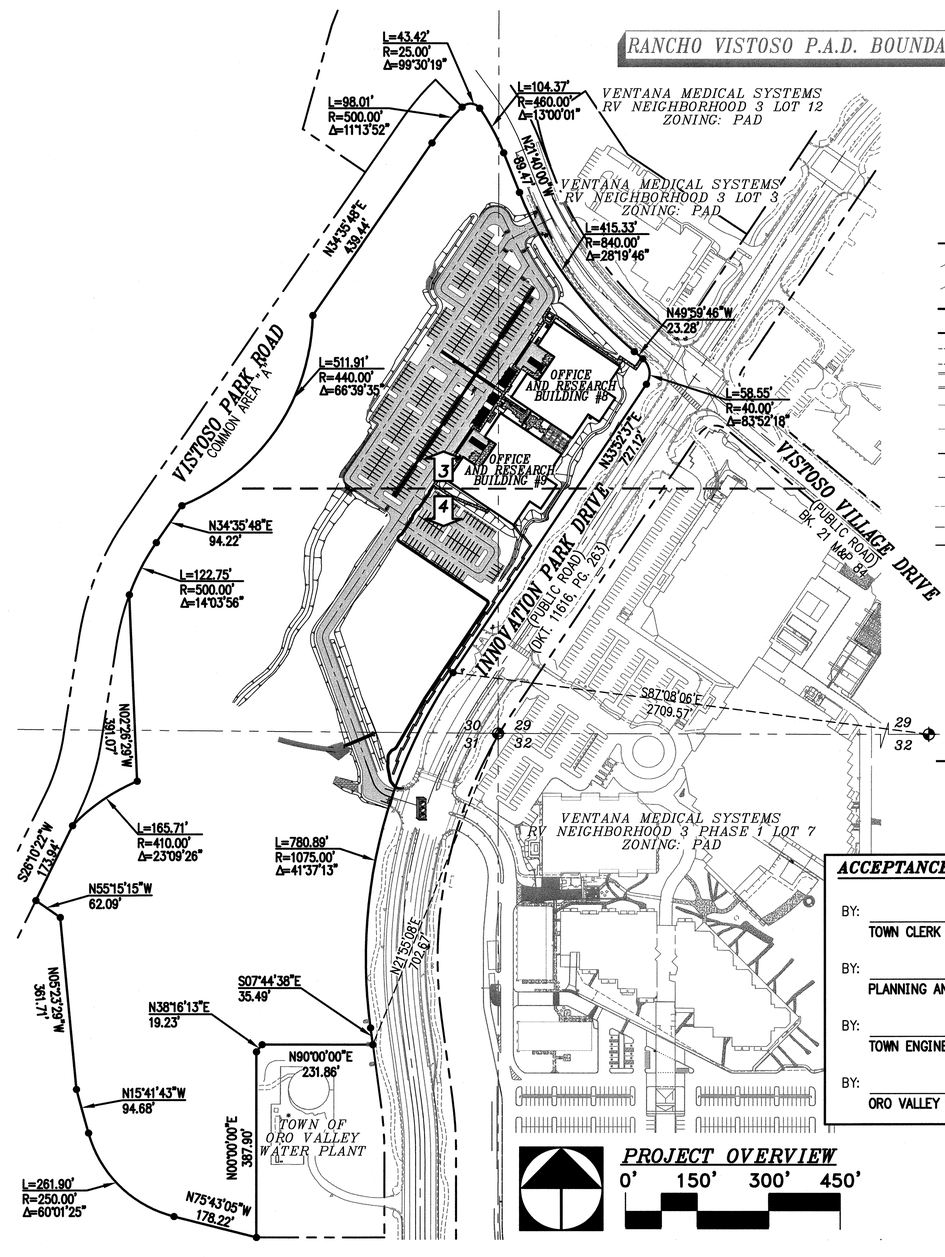

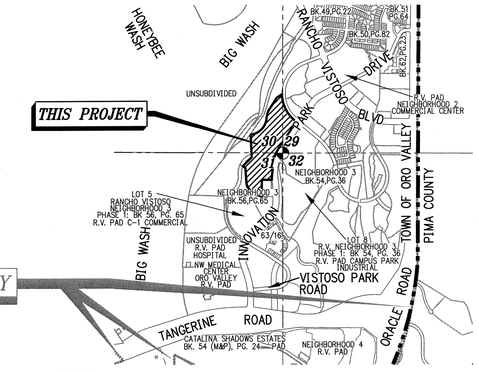

LOCATION MAP

PORTIONS OF SECTIONS 29, 30, AND 31
T-11-S, R-14-E, G.&S.R.M.
TOWN OF ORO VALLEY, PIMA COUNTY, ARIZONA
3"=1 mi

LEGEND

EXIST. MAJOR CONTOUR	EXIST. STORM DRAIN SYSTEM
EXIST. MINOR CONTOUR	EXIST. CULVERT
PROJECT BOUNDARY	PROPOSED CONCRETE SIDEWALK
EXIST. R.O.W. LINE	PARKING COUNT
EXIST. PAVEMENT	EXISTING
PROPOSED CURB	DOUBLE SHOT CHIP SEAL
EXIST. PUBLIC SEWER LINE & MANHOLE	EDGE OF PAVEMENT
EXIST. WATERLINE & VALVE	TOP OF SLOPE (SLOPES ≤ 3:1 UNLESS NOTED)
PROPOSED PUBLIC SEWER LINE & MANHOLE	BOTTOM OF SLOPE
PROPOSED PUBLIC WATERLINE & VALVE	SIGHT VISIBILITY TRIANGLE (SVT) SEE DTL. 2 SHT. 5
EXIST. EASEMENT LINE	PAD OPEN SPACE
PROPOSED EASEMENT LINE	PROPOSED GRADING LIMITS
SECTION LINE	PROPOSED WATERSHEDS
EXIST. SPOT ELEVATION	PROPOSED RIPRAP
PROPOSED SPOT ELEVATION	CONSTRUCTED CHANNEL SECTION SEE DETAIL 1 ON SHEET 4
PROPOSED SIDEWALK ELEVATION	SHEET INDICATOR
DIRECTION OF FLOW	CARPOOL PARKING SPACES (DOUBLE SHOT CHIP SEAL)
SECTION OR 1/4 SECTION CORNER	16' WIDE STABILIZED PORTION OF SEWER EASEMENT STABILIZED PER RWRD 111.
FINISHED FLOOR ELEVATION / FINISHED PAD ELEVATION	PROPOSED 4' D.G. PATH
GRADE BREAK (GB/HP/LP)	FIRE ACCESS LANE
MATCHLINE	PROPOSED CROSSWALK (TEXTURED AND COLORED)
ASPHALT	
APPROVED ADA SURFACE 2.5"AC/SUBGRADE	

ACCEPTANCE

BY: _____ TOWN CLERK _____ DATE

BY: _____ PLANNING AND ZONING ADMINISTRATOR _____ DATE

BY: _____ TOWN ENGINEER _____ DATE

BY: _____ ORO VALLEY WATER UTILITY DIRECTOR _____ DATE

PROJECT OVERVIEW

0' 150' 300' 450'

OWNER/DEVELOPER
VENTANA MEDICAL SYSTEMS, INC.
1910 E. INNOVATION PARK DRIVE
ORO VALLEY, AZ 85755
(520) 229-3780
ATTN: GREG THOMPSON
GREGTHOMPON@VENTANA.ROCHE.COM

ARCHITECT
ADVANTECH FACILITY DESIGN, INC.
3280 E. HEMISPHERE LOOP, #110
TUCSON, AZ. 85706
(520) 806-0903
ATTN: PAIMAN OWTAD
PAIMAN.OWTAD@ADVANTECHAE.COM

ENGINEER
THE WLB GROUP, INC.
4444 E. BROADWAY BLVD.
TUCSON, AZ 85711
(520) 881-7480
ATTN: DAVID LITTLE
DLITTLE@WLBGROUP.COM

SHEET INDEX

SHEET 1..... COVER SHEET
SHEET 2..... GENERAL NOTES & PAD MAP
SHEETS 3 & 4... SITE PLAN
SHEET 5..... DETAILS

Registered Professional Engineer (Civil) CERTIFICATE NO. 36234 DAVID W. LITTLE Date Signed 10-1-15 ARIZONA U.S.A.
EXPIRES 6/30/2016

OV1215-03
REVISED
FINAL SITE PLAN
FOR
VENTANA® MEDICAL SYSTEMS INC. A MEMBER OF THE ROCHE GROUP

LOT 4 MODULAR BUILDINGS

LOT 4 OF RANCHO VISTOSO NEIGHBORHOOD 3, PHASE 1 AS RECORDED IN BOOK 54, M&P PAGE 36, BEING PORTIONS OF SECTIONS 29, 30, & 31, TOWNSHIP 11 SOUTH, RANGE 14 EAST, G & S.R.M., TOWN OF ORO VALLEY, PIMA COUNTY, ARIZONA

SEPTEMBER 2015
WLB NO. 185050-AH-12
CONTOUR INTERVAL: 1' SCALE: AS SHOWN
REF. CASE #OV12-09-03

The WLB Group INC. WLB
Engineering • Planning • Surveying
Landscape Architecture • Urban Design
Offices located in: Tucson, Phoenix, and Flagstaff, Arizona and Las Vegas, Nevada.
4444 E. Broadway Tucson, Az. 85711
(520) 881-7480

N:\185050\RV3\VENTANA MEDICAL\LOT 4 MODULAR BUILDING\CSP\Rev 1\SHT-01.dwg

GOLDER RANCH FIRE GENERAL NOTES

1. FIRE HYDRANTS CONNECTED TO AN APPROVED WATER SUPPLY OF 1500 GPM FOR FIRE PROTECTION MUST BE INSTALLED AND IN SERVICE PRIOR TO COMBUSTIBLE MATERIAL DELIVERY TO THE SITE. TEMPORARY CONSTRUCTION OFFICE TRAILERS ARE CONSIDERED COMBUSTIBLE MATERIAL.
2. APPROVED FIRE APPARATUS ACCESS ROADS MUST BE INSTALLED AND IN SERVICE PRIOR TO COMBUSTIBLE MATERIAL DELIVERY TO THE SITE.
3. APPROVED AUTOMATIC SPRINKLER SYSTEMS IN NEW BUILDINGS AND STRUCTURES SHALL BE PROVIDED ALL GROUP A, B, E, F, H, I, M, R, AND S OCCUPANCIES FOR EVERY FACILITY, BUILDING OR PORTION OF A BUILDING HEREAFTER CONSTRUCTED WITHIN OR MOVED INTO THE JURISDICTION. APPROVED AUTOMATIC SPRINKLER SYSTEMS SHALL BE PROVIDED THROUGHOUT ALL ONE- AND TWO-FAMILY DWELLINGS AND TOWNHOUSES USED AS MODEL HOMES WITH SALES OR CONSTRUCTION OFFICES, AND ONE- AND TWO-FAMILY DWELLINGS AND TOWNHOUSES WHICH EXCEED 3,600 SQUARE FEET IN FIRE FLOW CALCULATION AREA HEREAFTER CONSTRUCTED WITHIN OR MOVED INTO THE JURISDICTION.
4. TEMPORARY STREET SIGNS MUST BE INSTALLED AT EACH STREET INTERSECTION WHEN CONSTRUCTION OF NEW ROADWAYS ALLOWS PASSAGE OF VEHICLES. ALL STRUCTURES UNDER CONSTRUCTION MUST BE CLEARLY IDENTIFIED WITH AN APPROVED ADDRESS.
5. THE INSTALLATION OF TRAFFIC CONTROL SIGNALING DEVICES AND/OR ELECTRICALLY OPERATED GATES ON FIRE APPARATUS ACCESS ROADS SHALL INCLUDE PREEMPTIVE CONTROL EQUIPMENT COMPATIBLE WITH THE FIRE DEPARTMENT'S EXISTING SYSTEM.

PERMITTING DIVISION–BUILDING CODES

THE FOLLOWING CODES AND STANDARDS SHALL BE APPLICABLE TO THIS DEVELOPMENT:

- 2012 INTERNATIONAL CODES WITH LOCAL AMENDMENTS
- 2011 NATIONAL ELECTRIC CODE
- 2004 ADA ACCESSIBLE GUIDELINES
- 2006 GOLDER RANCH FIRE DISTRICT STANDARDS AND FORMS
- 2008 ORO VALLEY POOL CODE
- 2003 PC/COT STANDARD SPECIFICATIONS AND DETAILS FOR PUBLIC IMPROVEMENTS
- 2010 TOWN OF ORO VALLEY DRAINAGE CRITERIA MANUAL
- 2004 TOWN OF ORO VALLEY SUBDIVISION STREET STANDARDS AND POLICIES MANUAL
- TOWN OF ORO VALLEY ZONING CODE, CURRENT REVISED
- ORO VALLEY TOWN CODE, CURRENT REVISED.
- 2010 ADA STANDARDS FOR ACCESSIBLE DESIGN

PARKING, LOADING & BICYCLE STORAGE CALCULATIONS

PAD/LOT NUMBER	PROPOSED USE	PARKING RATIO	PARKING CALCULATION	TOTAL PARKING		HANDICAP PARKING		LOADING ZONE RATIO	LOADING ZONES		BICYCLE PARKING CLASS II		HANDICAP VAN ACCESSIBLE	
				REQD.	PROV.	REQD.	PROV.		REQD.	PROV.	REQD.	PROV.	REQD.	PROV.
1	VENTANA MEDICAL (MODULAR BUILDING)	1 SPACE PER 250 SQUARE FEET 0.75 SPACES PER EACH EMPLOYEE	125 EMPLOYEES X 0.75 OFFICE SQUARE FOOTAGE 15500 SQUARE FEET / 250	156	312	8 SPACES	8 SPACES	–	1	1	(156/20) 8 SPACES	16 CLASS II 2 CLASS I SPACES	1	3
2	VENTANA MEDICAL (MODULAR BUILDING)		125 EMPLOYEES X 0.75 OFFICE SQUARE FOOTAGE 15500 SQUARE FEET / 250	156				–	1	1	(156/20) 8 SPACES		1	

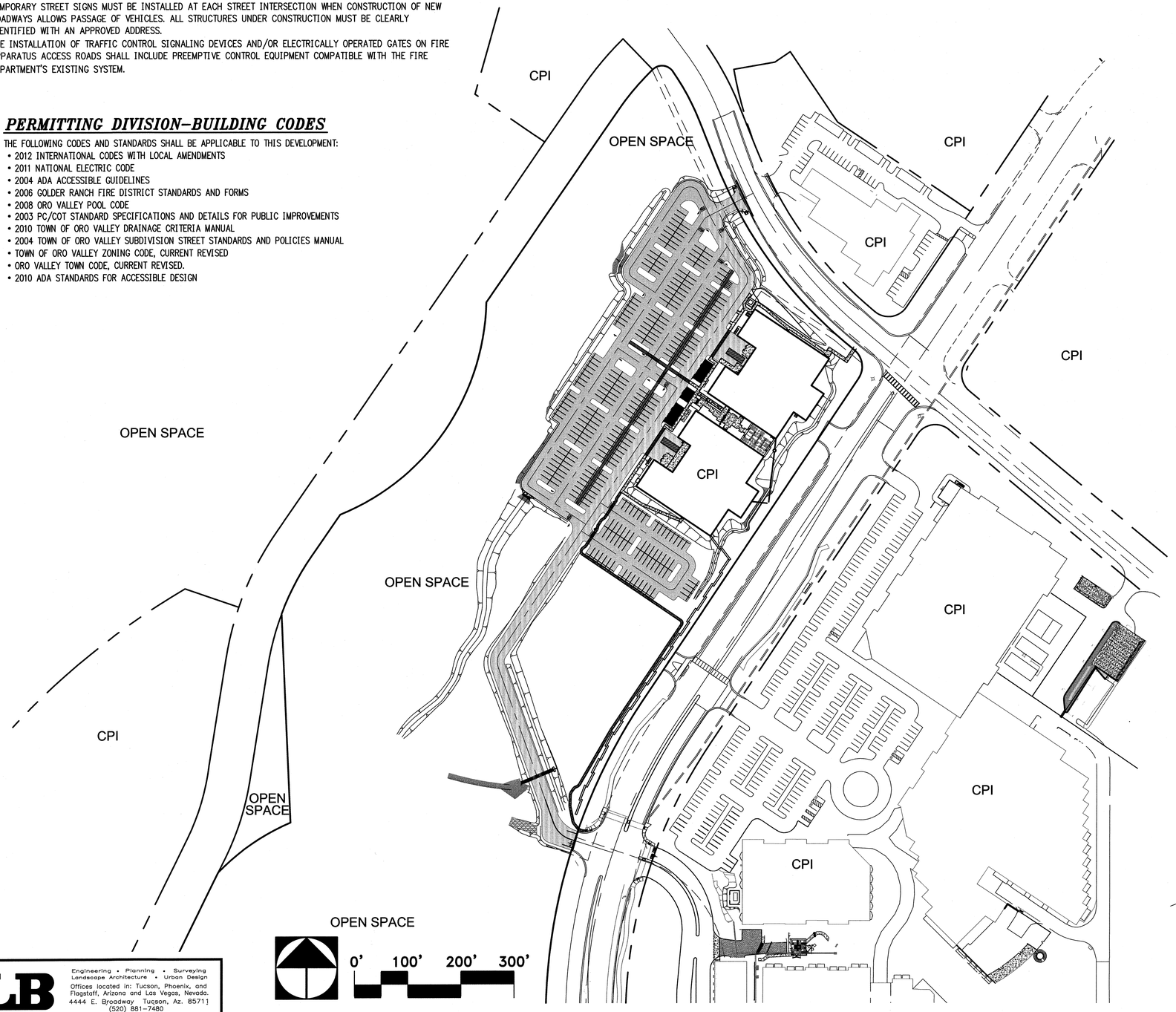

The WLB Group INC. **WLB**

Engineering • Planning • Surveying
Landscape Architecture • Urban Design
Offices located in: Tucson, Phoenix, and Flagstaff, Arizona and Las Vegas, Nevada.
4444 E. Broadway Tucson, Az. 85711
(520) 881-7480

Registered Professional Engineer (Civil) CERTIFICATE NO. 36234 DAVID W. LITTLE Date 10.1.15 Signature ARIZONA, U.S.A.
EXPIRES 6/30/2016

OV1215–03
REVISED
FINAL SITE PLAN
FOR
VENTANA® MEDICAL SYSTEMS INC.
A MEMBER OF THE ROCHE GROUP

LOT 4 MODULAR BUILDINGS

LOT 4 OF RANCHO VISTOSO NEIGHBORHOOD 3, PHASE 1 AS RECORDED IN BOOK 54, M&P PAGE 36, BEING PORTIONS OF SECTIONS 29, 30, & 31, TOWNSHIP 11 SOUTH, RANGE 14 EAST, G & S.R.M., TOWN OF ORO VALLEY, PIMA COUNTY, ARIZONA

SEPTEMBER 2015 REF. CASE #OV12–09–03
WLB NO. 185050–AH–12
CONTOUR INTERVAL: 1' SCALE: AS SHOWN

SHEET 2 OF 5

N:\185050\RV3\VENTANA MEDICAL\LOT 4 MODULAR BUILDING\CSP\Rev 1\SHT-02.dwg

C.I.=1 FT
SCALE: 1"=40'
0' 40' 80' 120'

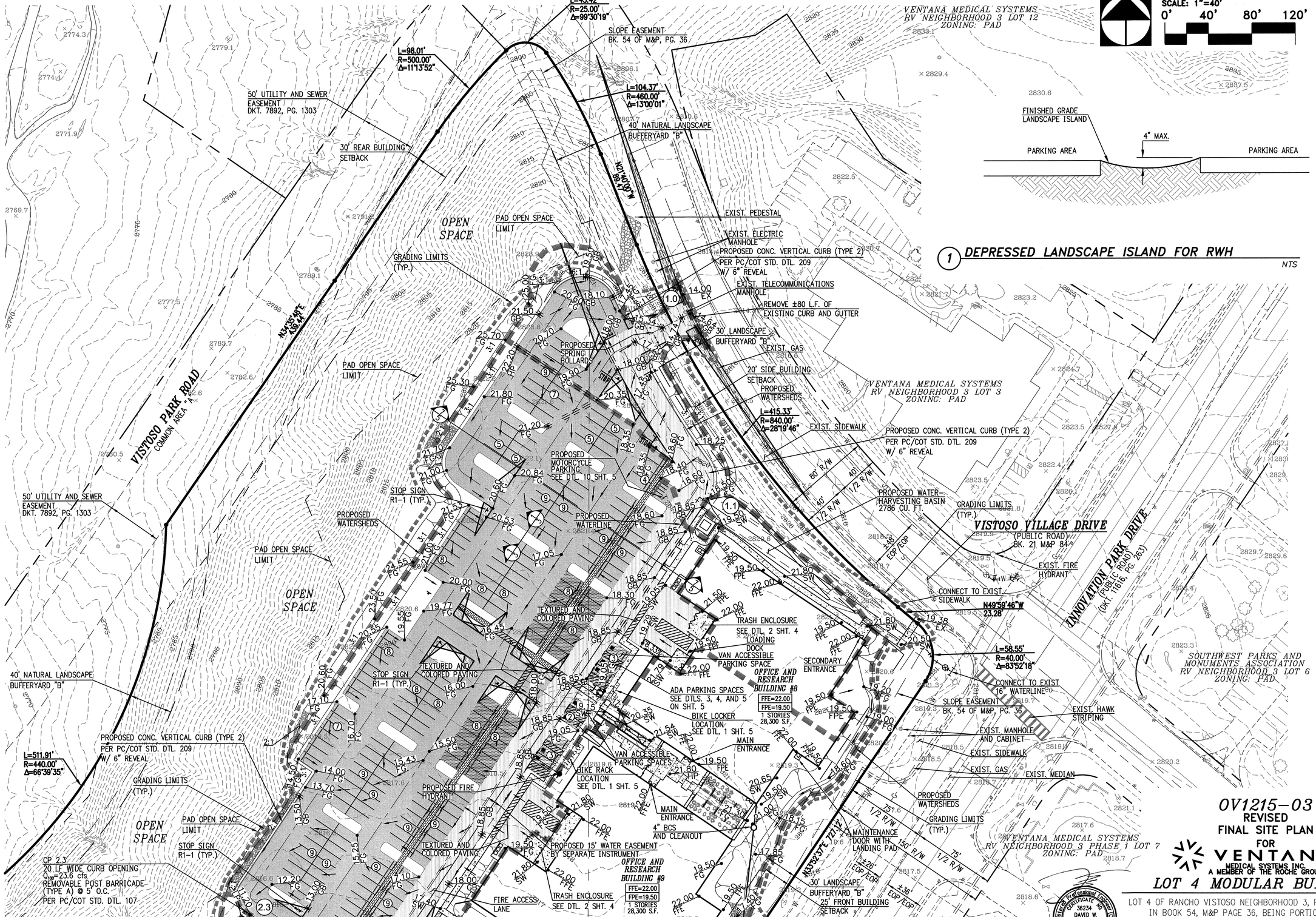

1 DEPRESSED LANDSCAPE ISLAND FOR RWH

NTS

OV1215-03

REVISED
FINAL SITE PLAN
FOR
VENTANA®
MEDICAL SYSTEMS INC.
A MEMBER OF THE ROCHE GROUP

LOT 4 MODULAR BUILDINGS

LOT 4 OF RANCHO VISTOSO NEIGHBORHOOD 3, PHASE 1 AS RECORDED IN BOOK 54, M&P PAGE 36, BEING PORTIONS OF SECTIONS 29, 30, & 31, TOWNSHIP 11 SOUTH, RANGE 14 EAST, G & S.R.M., TOWN OF ORO VALLEY, PIMA COUNTY, ARIZONA

SEPTEMBER 2015
WLB NO. 185050-AH-12
CONTOUR INTERVAL: 1' SCALE: 1"=40'

REF. CASE #OV12-09-03

Registered Professional Engineer (Civil)
CERTIFICATE NO. 36234
DAVID W. LITTLE
10/15/15
Date Signed
ARIZONA U.S.A.
EXPIRES 6/30/2016

The WLB Group INC.
WLB
Engineering • Planning • Surveying
Landscape Architecture • Urban Design
Offices located in: Tucson, Phoenix, and Flagstaff, Arizona and Las Vegas, Nevada.
4444 E. Broadway Tucson, Az. 85711
(520) 881-7480

N:\185050\RV3\VENTANA MEDICAL\LOT 4 MODULAR BUILDING\CSP\Rev 1\SHT-03.dwg

MATCHLINE–SEE SHEET 3

C.I.=1 FT
SCALE: 1"=40'
0' 40' 80' 120'

C.I.=1'

CP 2.3
TYPE 2 SIDEWALK SCUPPER
5–2.5' OPENINGS
TRITON FIRST FLUSH INSERT
OR APPROVED EQUIVALENT
Q_{100}=23.6 cfs
SEE DTL. 9 SHT. 5

GRADING LIMITS (TYP.)

PAD OPEN SPACE LIMIT

OPEN SPACE

PROPOSED CONC. VERTICAL CURB (TYPE 2) PER PC/COT STD. DTL. 209 W/ 6" REVEAL

TEXTURED AND COLORED PAVING

FUTURE PHASE

FIRE ACCESS LANE

EXIST. CHIP SEAL TO REMAIN OUTSIDE GRADING LIMITS

PROPOSED 15' WATER EASEMENT BY SEPARATE INSTRUMENT

EXIST. LIGHT POLE TO REMAIN (TYP.)

SLOPE EASEMENT BK. 54 OF M&P, PG. 36

EXIST. CHIP SEAL TO REMAIN OUTSIDE GRADING LIMITS STORM WATER DETENTION BASIN

BASIN CP 2.1
TYPE 4 CATCH BASIN
W/ 3–EF–1 GRATES
3–18" CMP'S 65.00 LF @ 1.54%
TRITON FIRST FLUSH INSERT
OR APPROVED EQUIVALENT
Inlet El.=2805.00
Outlet El.=2804.00
GRATE El.=2807.30
Q(IN)=30.7cfs
Q(OUT)=17.1cfs
Q_{100}WSEL=2808.00

20' SEWER EASEMENT BK. 56 OF M&P, PG. 65

EXIST. 30" RCP INV.=03.24

EX. MH #4607–11
PER G–2000–067
RIM=2795.00
8" INV.(NE)=2785.77

EXIST. RIP–RAP

EX. MH #4607–02
PER G–2000–067
RIM=2805.09
8" INV.(NE)=2785.29
8" INV.(E)=2785.19
8" INV.(W)=2785.09

60' PUBLIC SEWER EASEMENT DKT. 11841, PG. 2232

EX. 233.35 L.F. 8" PVC @ 5.55%

20' GAS AND ELECTRIC EASEMENT DKT. 11434, PG. 524

12" CULVERT PIPE TO BE REMOVED

EX. MH #4607–03
PER G–2000–067
EX. RIM=2807.32
NEW RIM=2808.30
8" INV.(SE)=2798.25
8" INV.(NW)=2798.15

CHROMIUM PLATED CHAIN BETWEEN POST UNDER LOCK WITH 1/4" CADMIUM PLATED CARRIAGE BOLTS WASHERS AND NUTS

BIKE LANE FOR DRIVEWAY ENTRANCE CONNECT TO EXIST. PAVEMENT

EXIST. STRIPING (TYP.)

L=780.89'
R=1075.00'
Δ=41°37'13"

25' FRONT BUILDING SETBACK

40' NATURAL LANDSCAPE BUFFERYARD "B"

EXIST. MEDIAN

PROPOSED WATERLINE

EXIST. LIGHT POLE TO BE REMOVED

EXIST. LIGHT POLE TO BE REMOVED

GRADING LIMITS (TYP.)

STORM WATER DETENTION BASIN

PROPOSED YELLOW DOUBLE SOLID (YDS) STRIPING

PROPOSED WALL

DRAINAGE EASEMENT BK. 56 OF M&P, PG. 65

EXIST. MEDIAN

EXIST. INTERSECTION STRIPING

PROPOSED MODIFIED EXISTING INTERSECTION STRIPING

EXIST. SIGNALIZED INTERSECTION

TRAFFIC CONTROL SIGNALIZATION (TYP.)

EXIST. MEDIAN

GRADING LIMITS (TYP.)

EXIST. GAS

EXIST. SIDEWALK

30' LANDSCAPE BUFFERYARD "B"

SECTION 30 SECTION 29 SECTION 31 SECTION 32

SECTION LINE

SECTION CORNER 29/30/31 & 32

20' SEWER EASEMENT BK. 54 OF M&P, PG. 36

EX. MH #4607–13
PER G–2000–067
RIM=2817.19
8" INV.(SE)=2809.33
2–4" BCS INV.=10.06

4" BCS

30' LANDSCAPE BUFFERYARD "B"

25' FRONT BUILDING SETBACK

EXIST. TREES AND DESERT SPOONS TO BE REMOVED AND REPLACED ELSEWHERE

EXIST. MEDIAN

GABION WALL TO ALLOW FOR DRAINAGE THROUGH CHANNEL

CONNECT TO EXIST 16" WATERLINE

EXIST. SIDEWALK

EXIST. GAS

SLOPE EASEMENT BK. 54 OF M&P, PG. 36

PROPOSED WALL GUIDING PEDESTRIAN ACCESS TOWARD HAWK SIGNALS

EXIST. MEDIAN

INNOVATION PARK DRIVE (PUBLIC ROAD) (DKT. 11616, PG. 263)

N33°33'32"E 722.12'

VENTANA MEDICAL SYSTEMS
RV NEIGHBORHOOD 3 PHASE 1 LOT 7
ZONING: PAD

VENTANA MEDICAL SYSTEMS
RV NEIGHBORHOOD 3 PHASE 1 LOT 7
ZONING: PAD

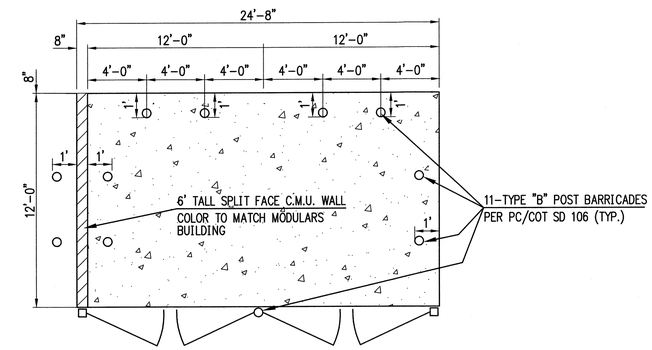

2 TYPICAL DUMPSTER LAYOUT

ALL GATES TO BE SELF CLOSING/SELF LATCHING & OPAQUE

NTS

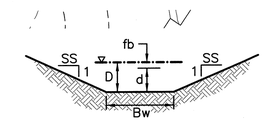

1 PROPOSED CONSTRUCTED CHANNEL DETAIL

NTS

TABLE OF CONSTRUCTED CHANNELS									
X–SEC	Q_{100}(cfs)	V_{100}(fps)	d	fb	D	SLOPE(%)	Bw	SS	n
X2.1	38.8	6.53	0.68'	0.22'	0.90'	4.69%	8'	1	0.035
X2.2	33.3	4.65	0.67'	0.17'	0.84'	2.34%	8'	4	0.032
X2.3	23.6	3.66	0.62'	0.14'	0.76'	1.60%	8'	4	0.032

Registered Professional Engineer (Civil) CERTIFICATE NO. 36234 DAVID W. LITTLE Date 10.1.15 Signature ARIZONA U.S.A.

EXPIRES 6/30/2016

OV1215–03
REVISED
FINAL SITE PLAN
FOR
VENTANA® MEDICAL SYSTEMS INC.
A MEMBER OF THE ROCHE GROUP

LOT 4 MODULAR BUILDINGS

LOT 4 OF RANCHO VISTOSO NEIGHBORHOOD 3, PHASE 1 AS RECORDED IN BOOK 54, M&P PAGE 36, BEING PORTIONS OF SECTIONS 29, 30, & 31, TOWNSHIP 11 SOUTH, RANGE 14 EAST, G & S.R.M., TOWN OF ORO VALLEY, PIMA COUNTY, ARIZONA

SEPTEMBER 2015
WLB NO. 185050–AH–12
CONTOUR INTERVAL: 1' SCALE: 1"=40'

REF. CASE #OV12–09–03

SHEET 4 OF 5

The WLB Group INC. WLB
Engineering • Planning • Surveying
Landscape Architecture • Urban Design
Offices located in: Tucson, Phoenix, and Flagstaff, Arizona and Las Vegas, Nevada.
4444 E. Broadway Tucson, Az. 85711
(520) 881–7480

N:\185050\RV3\VENTANA MEDICAL\LOT 4 MODULAR BUILDING\CSP\Rev 1\SHT-04.dwg

CLASS II PARKING

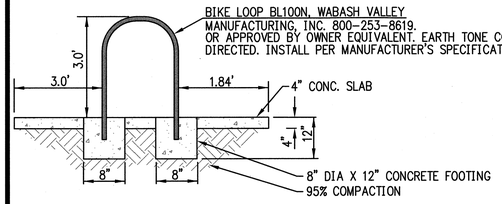

PROFILE

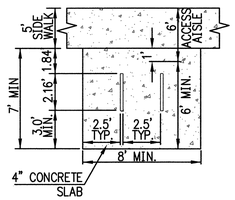

PLAN VIEW

CLASS I PARKING
(FOR REFERENCE ONLY)

THE COVERED, SECURED BICYCLE PARKING FACILITY PROTECTS AGAINST DIRECT SUNLIGHT AND THEFT OF THE ENTIRE BICYCLE AND OF ITS COMPONENTS AND ACCESSORIES BY THE USE OF:

1. BICYCLE LOCKERS
2. CHECK-IN FACILITIES
3. MONITORED PARKING
4. RESTRICTED ACCESS PARKING
5. OTHER SECURED PARKING AS APPROVED BY THE TOWN OF ORO VALLEY.

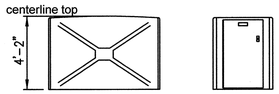

SIDE END

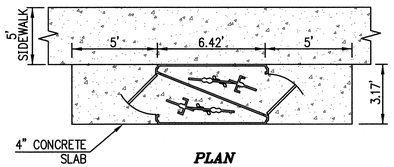

PLAN

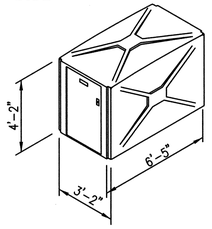

1 BICYCLE PARKING

NTS

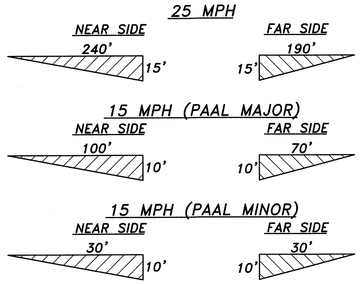

2 TYPICAL SIGHT VISIBILITY TRIANGLE DETAIL

NTS

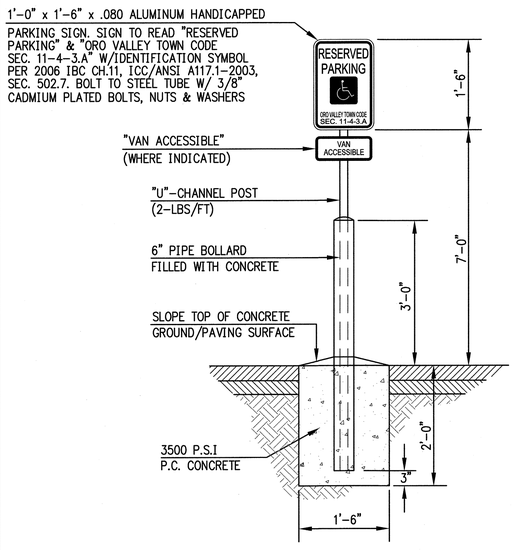

3 TYPICAL ACCESSIBLE PARKING SIGN

NTS

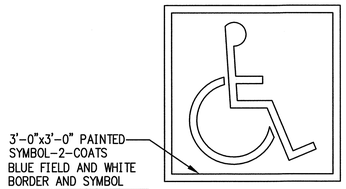

3'-0"x3'-0" PAINTED SYMBOL-2-COATS BLUE FIELD AND WHITE BORDER AND SYMBOL

SYMBOL TO BE CENTERED ON WIDTH OF PARKING STALL

IN ADDITION TO PAINTED PARKING SYMBOL, PROVIDE A 70 SQ.IN. SIGN SHOWING H/C SYMBOL ONLY AT EACH HANDICAPPED PARKING STALL PER TITLE 24 AND A.D.A.

4 HANDICAP SYMBOL

NTS

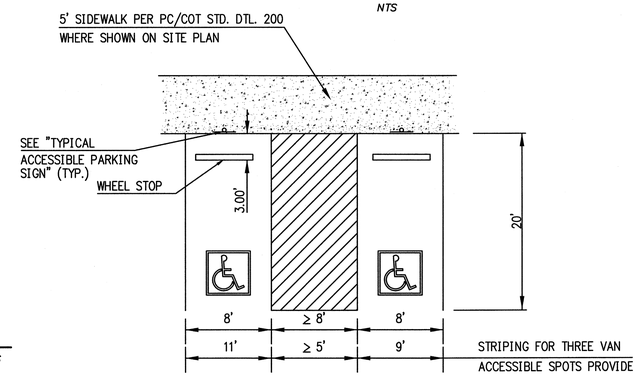

5 HANDICAP PARKING SPACE STRIPING

NTS

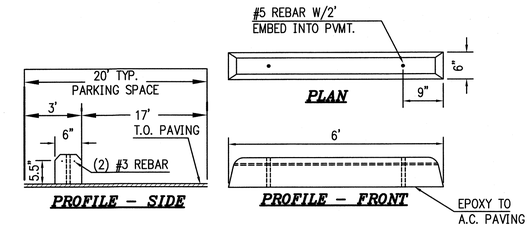

6 CONCRETE WHEEL STOP

NTS

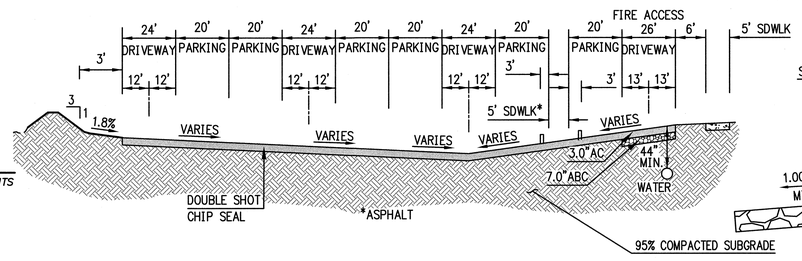

7 TYPICAL CROSS SECTION P.A.A.L.

NTS

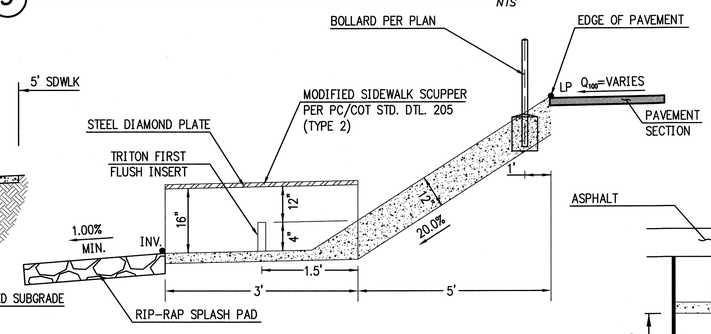

9 SIDEWALK SCUPPER WITH TRITON FIRST FLUSH INSERT-SECTION

NTS

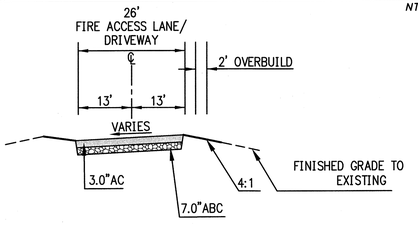

8 FIRE ACCESS LANE/DRIVEWAY

NTS

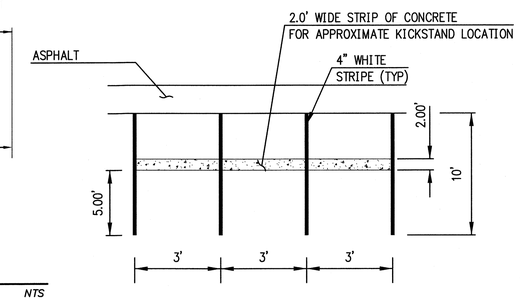

10 MOTORCYCLE PARKING SPACE STRIPING

NTS

TABLE OF HYDRAULIC STRUCTURES

CONC. PT.	Q_{100}(cfs)	STRUCTURE
2.1	17.1	TYPE 4 CATCH BASIN W/3 EF-1 GRATES. 3-18"CMP'S; 65.00LF @ 1.54%, V100=7.1fps, HW=2808.0' W/TRITON FIRST FLUSH INSERTS
2.3	23.6	20 LF WIDE DEPRESSED CURB OPENING
2.3	23.6	12.5' WIDE MODIFIED TYPE 2 SCUPPER (5 CELLS) PER PC/COT STD DTL 205 W/ TRITON FIRST FLUSH INSERTS

TABLE OF POST-DEVELOPED PEAK DISCHARGES

CONC. PT	DRAINAGE AREA (ac)	Q_2 (cfs)	Q_{10} (cfs)	Q_{50} (cfs)	Q_{100} (cfs)
1.0	0.49	1.2	2.1	3.1	3.5
1.1	0.47	0.8	1.7	2.6	3.0
2.0*	0.50	0.7	1.6	2.6	3.0/64.0
2.1	4.83	11.6	19.1	26.9	30.7
2.2*	2.23/5.17	6.9/12.8	11.3/21.0	15.7/29.3	17.8/33.3
2.3	2.94	9.1	14.9	20.8	23.6
3.0	0.02	0.0	0.1	0.1	0.1

* Includes cumulative discharges

Registered Professional Engineer (Civil) CERTIFICATE NO. 36234 DAVID W. LITTLE Date 8.1.15 Signed ARIZONA U.S.A.

EXPIRES 6/30/2016

OV1215-03
REVISED
FINAL SITE PLAN
FOR
VENTANA® MEDICAL SYSTEMS INC.
A MEMBER OF THE ROCHE GROUP

LOT 4 MODULAR BUILDINGS

LOT 4 OF RANCHO VISTOSO NEIGHBORHOOD 3, PHASE 1 AS RECORDED IN BOOK 54, M&P PAGE 36, BEING PORTIONS OF SECTIONS 29, 30, & 31, TOWNSHIP 11 SOUTH, RANGE 14 EAST, G & S.R.M., TOWN OF ORO VALLEY, PIMA COUNTY, ARIZONA

SEPTEMBER 2015
WLB NO. 185050-AH-12
CONTOUR INTERVAL: 1' SCALE: AS SHOWN

REF. CASE #OV12-09-03

SHEET 5 OF 5

The WLB Group INC. WLB
Engineering • Planning • Surveying
Landscape Architecture • Urban Design
Offices located in: Tucson, Phoenix, and Flagstaff, Arizona and Las Vegas, Nevada.
4444 E. Broadway Tucson, Az. 85711
(520) 881-7480

N:\185050\RV3\VENTANA MEDICAL\LOT 4 MODULAR BUILDING\CSP\Rev 1\SHT-05.dwg